San Ace 60W 9WPA type
Splash Proof Fan

Features

High Airflow and High Static Pressure
This fan delivers a maximum airflow of 1.52 m^3/min and a maximum static pressure of 357 Pa.
Compared with the current models,(1) the maximum airflow has increased by 2 times and maximum static pressure has increased by 4 times.

Water and Dust Resistance
These fans have IP68-rated(2) water and dust protection. They maintain stable operation even in harsh environments.

Low Noise and High Energy Efficiency
The PWM control function enables the control of fan speed, contributing to lowering noise and improving energy efficiency of devices.

(1) Current models: *San Ace 60* 9WP type 60 × 60 × 25 mm DC Fan
(model nos. 9WP0612G401, 9WP0624G401).

(2) The degree of protection (IP code) is defined by IEC 60529 (International Electrotechnical Commission).
IP68:
Completely protected against dust
Protected against submersion in water

IPX8 Requirements
When the power is off, the fan is submerged in water pressurized to the equivalent of 2 meters for 60 minutes. Then it's run for 15 minutes at the rated voltage in free-air. During the test, there shall be no reduction in dielectric strength or fan characteristics.

Image depicts product without ribs.

60 × 60 × 25 mm

Specifications

The models listed below **have ribs and pulse sensors with PWM control function.** For models without ribs, append "1" to the end of model numbers.

Model no.	Rated voltage [V]	Operating voltage range [V]	PWM duty cycle* [%]	Rated current [A]	Rated input [W]	Rated speed [min^{-1}]	Max. airflow [m^3/min]	Max. airflow [CFM]	Max. static pressure [Pa]	Max. static pressure [inchH_2O]	SPL [dB(A)]	Operating temperature [°C]	Expected life [h]
9WPA0612P4G001	12	10.8 to 13.2	100	0.93	11.16	12000	1.52	53.7	357	1.44	56	-20 to +70	40000/60°C (70000/40°C)
			20	0.09	1.08	3500	0.41	14.5	31	0.13	22		
9WPA0624P4G001	24	21.6 to 26.4	100	0.46	11.04	12000	1.52	53.7	357	1.44	56		
			20	0.05	1.2	3500	0.41	14.5	31	0.13	22		

* PWM input frequency is 25 kHz; models without specifications at 0% PWM duty cycle have zero fan speed at 0%.

Models with the following sensor specifications are also available as options: Without sensor Lock sensor

Common Specifications

- ☐ Material ····· Frame: Plastic (Flammability: UL 94V-0), Impeller: Plastic (Flammability: UL 94V-0)
- ☐ Expected life ····· Refer to specifications
  (L10 life: 90% survival rate for continuous operation in indoor free air at 60°C, rated voltage)
  Expected life at 40°C is for reference only.
- ☐ Motor protection function ····· Locked rotor burnout protection, Reverse polarity protection
- ☐ Dielectric strength ····· 50/60 Hz, 500 VAC, for 1 minute (between lead wire conductors and frame)
- ☐ Insulation resistance ····· 10 MΩ or more with a 500 VDC megger (between lead wire conductors and frame)
- ☐ Sound pressure level (SPL) ····· At 1 m away from the air inlet
- ☐ Operating temperature ····· Refer to specifications (Non-condensing)
- ☐ Storage temperature ····· -30 to +70°C (Non-condensing)
- ☐ Lead wire ····· ⊕ Red ⊖ Black Sensor Yellow Control Brown
- ☐ Mass ····· 110 g
- ☐ Ingress protection ····· IP68

Airflow - Static Pressure Characteristics

・ PWM duty cycle

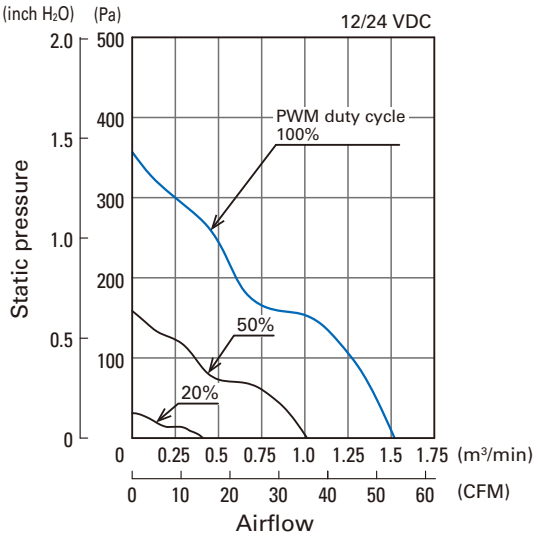

9WPA0612P4G001
9WPA0624P4G001

・ Operating voltage range

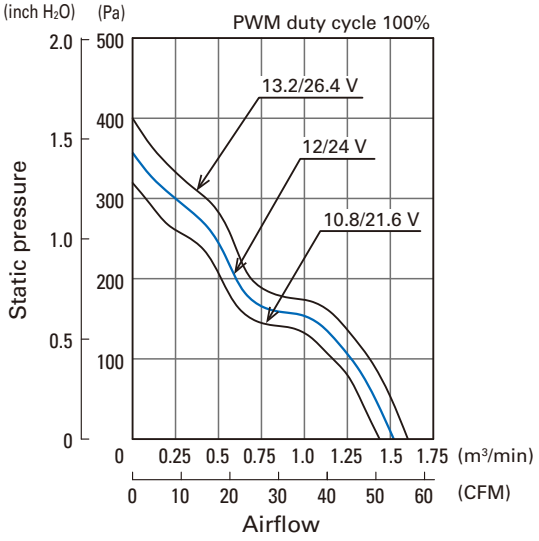

9WPA0612P4G001
9WPA0624P4G001

PWM Duty - Speed Characteristics Example

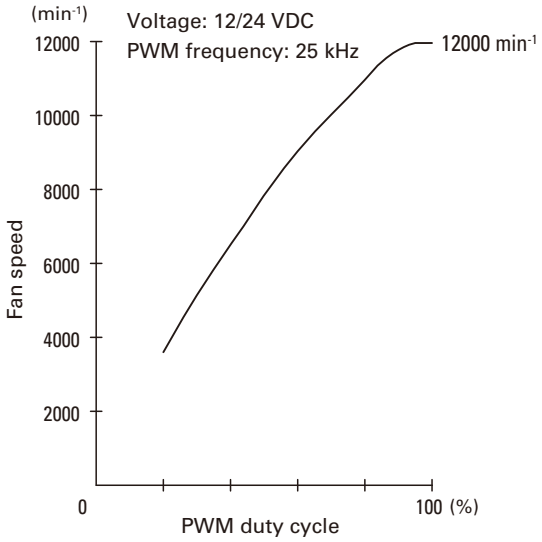

9WPA0612P4G001
9WPA0624P4G001

PWM Input Signal Example

Input signal waveform

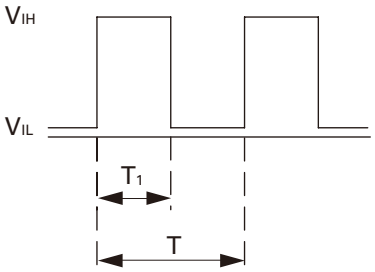

V_{IH} = 4.75 to 5.25 V V_{IL} = 0 to 0.4 V

PWM duty cycle (%) = $\frac{T_1}{T} \times 100$ PWM frequency 25 (kHz) = $\frac{1}{T}$

Current source (Isource) = 1 mA max. (when control voltage is 0 V)

Current sink (Isink) = 1 mA max. (when control voltage is 5.25 V)

Control terminal voltage = 5.25 V max. (when control terminal is open)

When the control terminal is open,
fan speed is the same as when PWM duty cycle is 100%.
Either TTL input, open collector or open drain can be used for
PWM control input signal.

Example of Connection Schematic

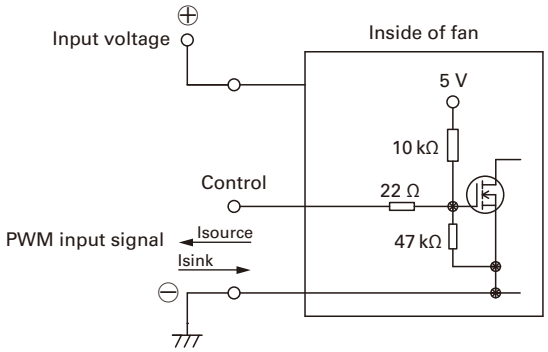

Specifications for Pulse Sensors

Output circuit: Open collector

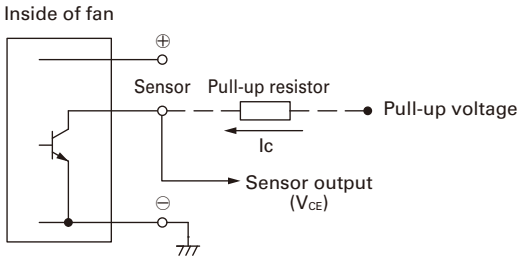

Rated voltage 12 V fan
V_{CE} = +13.2 V max.
Ic = 5 mA max. [V_{OL} = V_{CE} (SAT) = 0.8 V max.]

Rated voltage 24 V fan
V_{CE} = +26.4 V max.
Ic = 5 mA max. [V_{OL} = V_{CE} (SAT) = 0.8 V max.]

Output waveform (Need pull-up resistor)

In case of steady running

(One revolution)

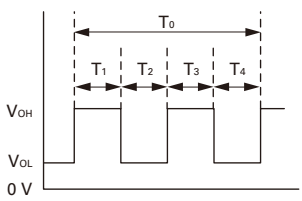

$T_{1\ to\ 4} \fallingdotseq (1/4)\ T_0$

$T_{1\ to\ 4} \fallingdotseq (1/4)\ T_0 = 60/4N$ (s)

N = Fan speed (min^{-1})

Dimensions (unit: mm) (With ribs)

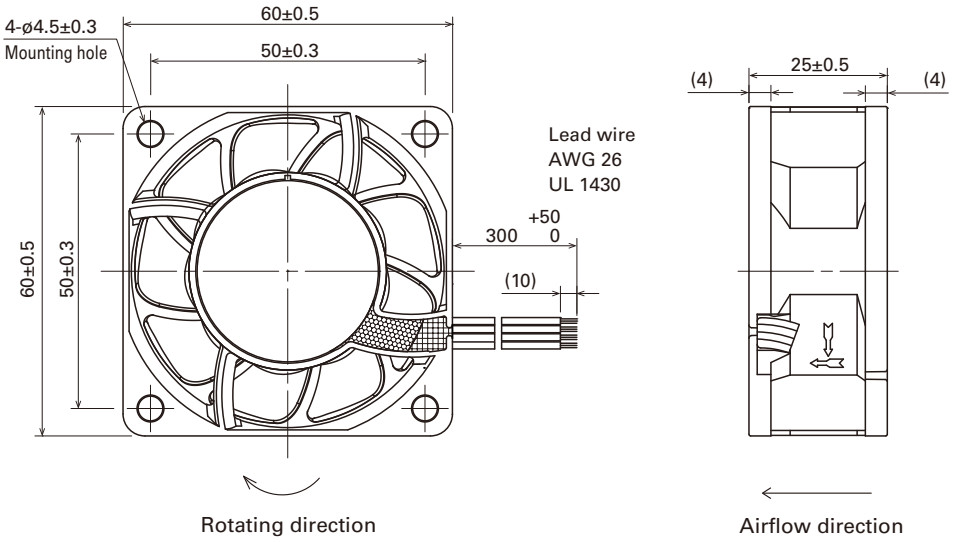

Reference Dimensions of Mounting Holes and Vent Opening (unit: mm)

Inlet side, Outlet side

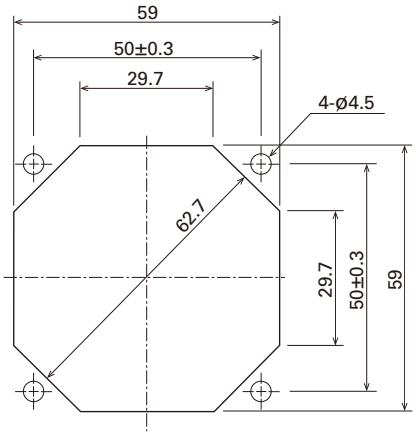

Notice

- Please read the "Safety Precautions" on our website before using the product.
- The products shown in this catalog are subject to Japanese Export Control Law. Diversion contrary to the law of exporting country is prohibited.
- For protecting fan bearings against electrolytic corrosion near strong electromagnetic noise sources, we provide effective countermeasures such as Electrolytic Corrosion Proof Fans and EMC guards. Contact us for details.

SANYO DENKI CO.,LTD. 3-33-1 Minami-Otsuka, Toshima-ku, Tokyo 170-8451, Japan TEL: +81 3 5927 1020 https://www.sanyodenki.com

The names of companies and/or their products specified in this catalog are the trade names, and/or trademarks and/or registered trademarks of such respective companies.
"San Ace" is a trademark of SANYO DENKI CO.,LTD.
Specifications are subject to change without notice.

CATALOG No. C1105B001 '20.4